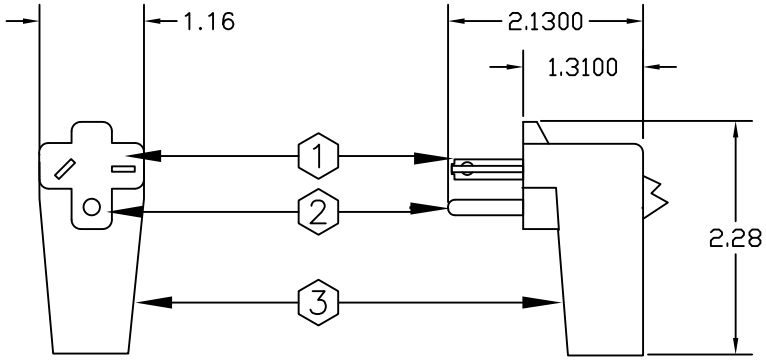

1 BRASS BLADE

2 BRASS GROUND PIN

3 MOULDED THERMOPLASTIC

WHERE "cc" REPRESENTS COLOUR CODE I.E. "BK" IS BLACK

SYSTEM IS RATED FOR CONNECTION TO A GROUNDED 277V OR 347V BRANCH CIRCUIT.
MANUFACTURED WIRING SYSTEM UTILIZING 12 AWG APPROVED ULTRALX CABLE.
INSTALLATION IN ACCORDANCE WITH THE CEC PART I OR THE NEC.
ACCEPTABLE FOR USE IN ENVIRONMENTAL AIR SPACES OTHER THAN DUCTS OR PLENUMS PER CEC PART I 12-010(3) OR NEC 300-22(C)
MEETS OR EXCEEDS: - CSA 22.2 NO. 203.1
- UL 183

C US LR 91749 US

277 OR 347 Volt 20 Amp

CDN. PATENT – 1219307 U.S. PATENT – 4775802

ITEM	DESCRIPTION		PART#/POSITION	REMARKS

ELECTEC
100-5977 HAZELDEAN ROAD, OTTAWA, ONTARIO, CANADA K2S 1B9
TELEPHONE (613) 836-0300 FAX (613) 836-0391
TOLL-FREE (866) 233-5328 FAX (866) 933-1933
e-mail: support@electeconline.com

OWNERSHIP OF DOCUMENTS
This drawing and accompanying information as instrument of service are the property of ***ELECTEC***. Reproduction or use in whole or in part in any form whether the work for which they are presented is executed or not is forbidden without the express written permission of ***ELECTEC***.

BLANKING PLUG

105347BPcc

DRAWN BY: J.Y.	APPROVED: D.H.	105347BP.6
DATE: 27–NOV–08	SCALE: N.T.S.	